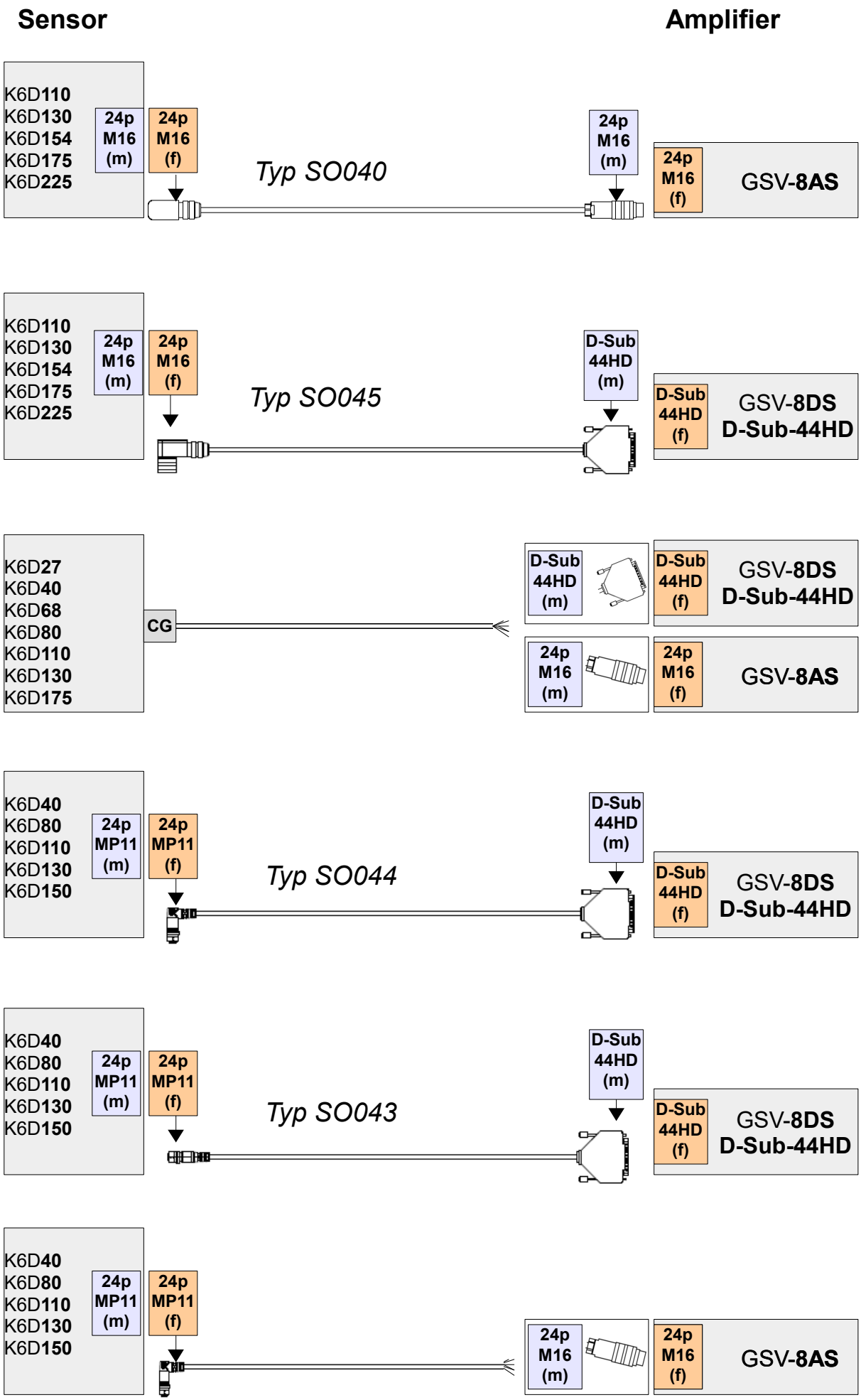
Sensor
Amplifier
K6D110
K6D130
K6D154
K6D175
K6D225
24p M16 (m)
24p M16 (f)
Typ SO040
24p M16 (m)
24p M16 (f)
GSV-8AS
K6D110
K6D130
K6D154
K6D175
K6D225
24p M16 (m)
24p M16 (f)
Typ SO045
D-Sub 44HD (m)
D-Sub 44HD (f)
GSV-8DS D-Sub-44HD
K6D27
K6D40
K6D68
K6D80
K6D110
K6D130
K6D175
CG
D-Sub 44HD (m)
D-Sub 44HD (f)
GSV-8DS D-Sub-44HD
24p M16 (m)
24p M16 (f)
GSV-8AS
K6D40
K6D80
K6D110
K6D130
K6D150
24p MP11 (m)
24p MP11 (f)
Typ SO044
D-Sub 44HD (m)
D-Sub 44HD (f)
GSV-8DS D-Sub-44HD
K6D40
K6D80
K6D110
K6D130
K6D150
24p MP11 (m)
24p MP11 (f)
Typ SO043
D-Sub 44HD (m)
D-Sub 44HD (f)
GSV-8DS D-Sub-44HD
K6D40
K6D80
K6D110
K6D130
K6D150
24p MP11 (m)
24p MP11 (f)
24p M16 (m)
24p M16 (f)
GSV-8AS