ME-Meßsysteme GmbH
Eduard-Maurer-Str. 9
DE-16761 Hennigsdorf

Tel +49 (0)3302 8982 4 10
Fax +49 (0)3302 8982 4 69

Mail info@me-systeme.de
Web www.me-systeme.de

DA90e ±100

Description

Thanks to its closed construction and stainless steel design, the DA90 strain sensor is suitable for measuring strain and force on machine elements and components in harsh environments.

Install by screwing on with 4 M6 screws. Example applications include force supervision, fill level measurement and strain analysis on steel components. Mechanical strain on the component is transferred to the strain sensor using forced closure via the 4 fixing screws and transformed into an electrical output signal.

Output signal and thermal behaviour and transmission ratio depend on the geometry and combination of materials of the strain sensor and component. Therefore, the sensor is calibrated by subjecting the component to a certain degree of force.

The DA90e strain sensor contains a 0...10V or 4...20mA measuring amplifier with zero-setting and scale function, as well as threshold value output.

ME-Meßsysteme GmbH
Eduard-Maurer-Str. 9
DE-16761 Hennigsdorf

Tel +49 (0)3302 8982 4 10
Fax +49 (0)3302 8982 4 69

Mail info@me-systeme.de
Web www.me-systeme.de

Dimensions

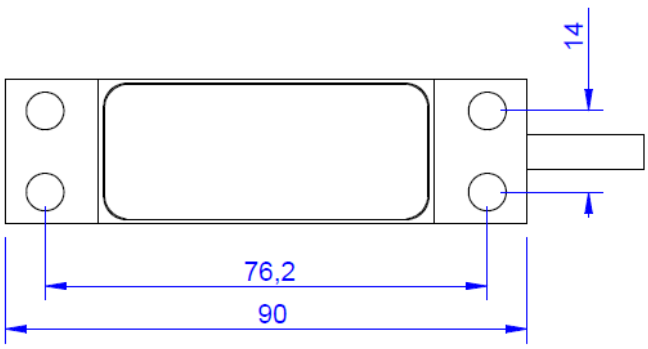

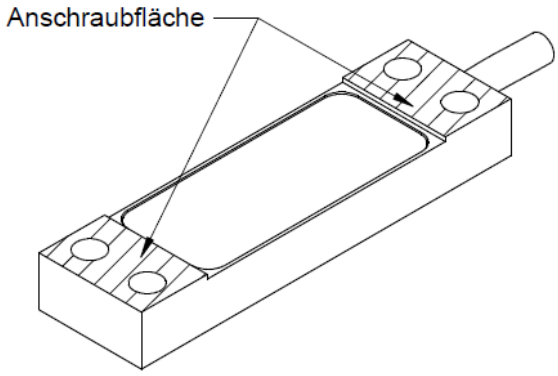

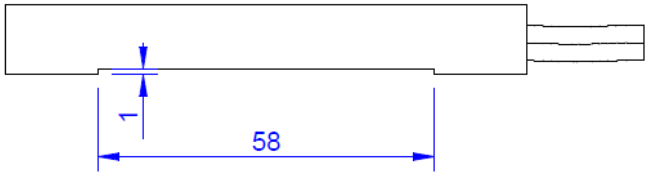

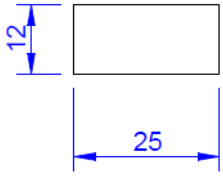

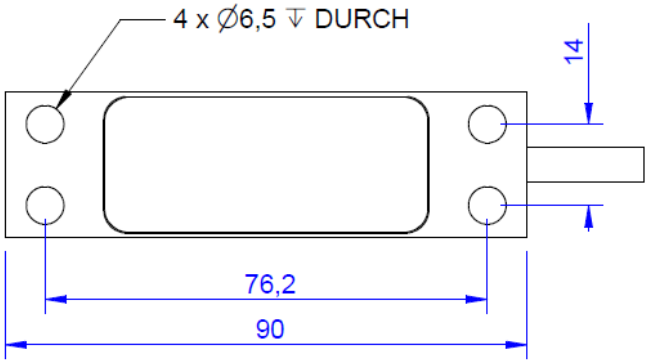

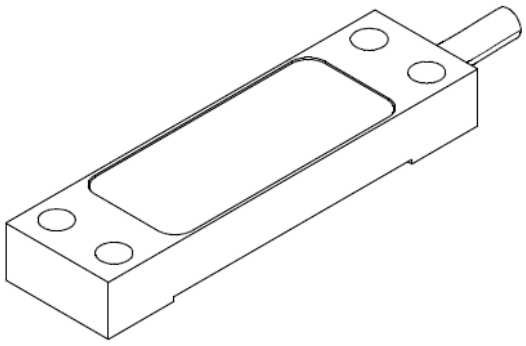

ME-Meßsysteme GmbH
Eduard-Maurer-Str. 9
DE-16761 Hennigsdorf

Tel +49 (0)3302 8982 4 10
Fax +49 (0)3302 8982 4 69

Mail info@me-systeme.de
Web www.me-systeme.de

Technical Data

Electrical Data

Input resistance	350	Ohm
Tolerance input resistance	1	Ohm
Insulation resistance	5	GOhm

Measuring frequency

Data frequency f	5 ... 105	Hz
Sampling frequency	105	Hz

Supply

Supply voltage f	14 ... 30	v
Current consumption from	15	mA

Connection Data

Connection type	7-Leiter offen	
Name of the connection	5m Unitronic FD CP Plus 7x0,14	
Cable length	5	m

Basic Data

Type	Dehnungsaufnehmer	
Nominal strain	100	µm/m
Operating strain	400	µm/m
Material	Tool steel	
Surface	electrogalvanized	

ME-Meßsysteme GmbH
Eduard-Maurer-Str. 9
DE-16761 Hennigsdorf

Tel +49 (0)3302 8982 4 10
Fax +49 (0)3302 8982 4 69

Mail info@me-systeme.de
Web www.me-systeme.de

Pin Configuration

Symbol	Description	Wire colour	PIN
Ub	Supply voltage (24V or 12V DC)	brown	1
GND	Connect ground, supply voltage	white	2
Ua	Output signal 4...20mA / 0...10V	green	3
Tara	Control input for zero balance	yellow	4
Scale	Control input for amplification factor	grey	5
SW	Threshold output	pink	6
GND	Connect ground, signal	blue	7
	shiled (is not connected with the housing)	transparent	

With integrated electronics GSV-15L / GSV-6L.

Ground signal connected to ground supply internally.

ME-Meßsysteme GmbH
Eduard-Maurer-Str. 9
DE-16761 Hennigsdorf

Tel +49 (0)3302 8982 4 10
Fax +49 (0)3302 8982 4 69

Mail info@me-systeme.de
Web www.me-systeme.de

accessories

	Description	Description
	Aktivator-11	Spray 200ml; Activator solvent-based for anaerobic adhesives;
	Loxeal-8521	Retainer anaerobic for DA70, DA90, DA120, high-strength; -55°C ...+ 150°C;