Measuring amplifier GSV-8DS EC/SubD15HD

Item number: 8143



Highlights

- 8-channel amplifier
- 8x input configurable
- Full, half, quarter bridge, 120- 350- 1000 ohm, PT1000, ± 10V, Thermocouple Type K, IEPE Sensors
- Outputs 1x USB port, 8x analog output ± 10V, 4 ... 20mA configurable
- optional EtherCat, CANbus / CANopen
- optional external extensions Ethernet, Wi-Fi, LTE
- 16x Digital Input Output
- 5x galvanic isolation: analog input, analog output, digital IO, USB
- 8x 48kS / s simultaneous sampling
- 6-wire technology, bridge supply 2.5V, 5.0V, 8.75V configurable
- Digital filters IIR and FIR configurable
- Resolution <20 nV / V

The 8-channel measuring amplifier GSV-8 is characterized by particularly high resolution at data rates from 1 Hz to 48000 Hz.
The 8 channels are recorded simultaneously, without multiplexing.

As communication interfaces USB port, optional EtherCAT or CANbus are available.

The device has 8 configurable analog outputs (± 10V et al and 4 ... 20mA).

There are 8 analog inputs. They are individually configurable as:

- DMS input for full bridges in 4- and 6-wire technology
- DMS input for half-bridges
- DMS input for quarter-bridge 120 ohms, 350 ohms, 1kOhm
- Single-ended input ± 10V
- Input for PT1000 temperature sensor,
- Input for thermocouple type K.

Sensors with IEPE (ICP) interface can be connected via an adapter plug with BNC socket, e.g. IEPE acceleration sensors, IEPE force sensors, etc.

ME-Meßsysteme GmbH
Eduard-Maurer-Str. 9
DE-16761 Hennigsdorf

Tel: +49 (0)3302 8982 4 10
Mail: vertrieb@me-systeme.de
Web: www.me-systeme.de

Stand: 07.11.2026

The measuring amplifier GSV-8DS SubD44 is equipped with industrial connectors SubD44HD. This connector is suitable for connection of

- 1x 6-axis sensor K6D or alternatively with
- 2x for DMS 0-45-90 rosettes or 2x 3-axis sensors;
- 1x for 2 DMS T rosette or 1x 2-axis sensors;

The inputs 1 to 6 are connected in parallel on the connectors 1/6 to the inputs on the connectors 1/3 and 4/6.

Technical Drawing

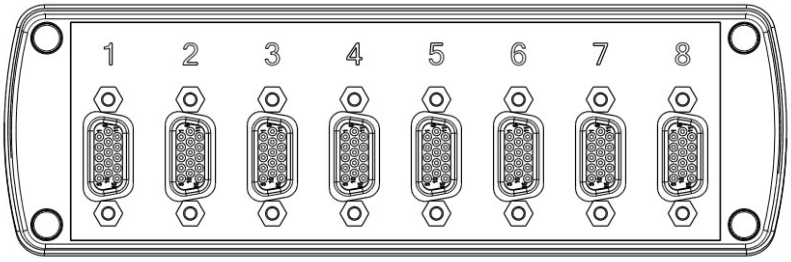

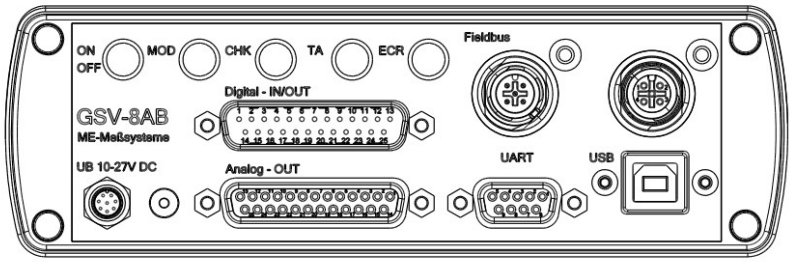

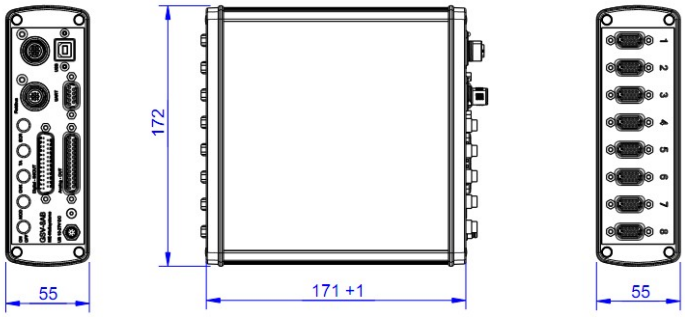

ME-Meßsysteme GmbH
Eduard-Maurer-Str. 9
DE-16761 Hennigsdorf

Tel: +49 (0)3302 8982 4 10
Mail: vertrieb@me-systeme.de
Web: www.me-systeme.de

Stand: 07.11.2026

Technical Data

Basic Data		Unit
Dimensions	172 x 172 x 55	mm³
Housing	Aluminium	
Connection	Plug connector	
Connection type	Sub-D15HD	
Number of channels	8-channel	
Interface	USB, UART 3.3V, Analog, Dig. IO, EC, CAN, LAN	
Functions	Tara, Gain, Threshold, DIO	

Input analog		Unit
Input sensitivity-steps	2.0 | 3.5 | 7	mV/V
Strain-gauge-full-bridge resistance from	88	Ohm
Strain-gauge-full-bridge resistance to	5000	Ohm
Input voltage from	-10	V
Input voltage to	10	V
Input resistance-voltage	10	MOhm
Temperature measuring range PT1000	-230...1500	°C
Temperature measuring range Type K	-260...445	°C

Output analog		Unit
Number of analog outputs	8	
Voltage output from	-10	V
Voltage output to	10	V
Output resistance - voltage output	50	Ohm
Current output from	4	mA
Current output to	20	mA
Maximum load resistance - current output	500	Ohm
Isolation of the analog output	2	kV

ME-Meßsysteme GmbH
Eduard-Maurer-Str. 9
DE-16761 Hennigsdorf

Tel: +49 (0)3302 8982 4 10
Mail: vertrieb@me-systeme.de
Web: www.me-systeme.de

Stand: 07.11.2026

Accuracy data		Unit
Accuracy class	0,05%	
Relative linearity error	0.02	%FS
Resolution	24	Bit

Measuring frequency		Unit
Data frequency from	0	Hz
Data frequency to	48000	Hz

Supply		Unit
Supply voltage from	9	V
Supply voltage to	28	V
Strain gauge bridge supply	5 | 2.5 | 8.75	V

Interface		Unit
Type of the interface	USB | Ethercat | TEDS	
Quantity of the interface	2	
Version of the interface	USB 2.0 Fullspeed, EtherCat Fieldbus	

Zero Adjustment	Unit

Environmental Data		Unit
Rated temperature range from	0	°C
Rated temperature range to	50	°C
Operating temperature range from	-20	°C
Operating temperature range to	70	°C
Environmental protection	IP64	

ME-Meßsysteme GmbH
Eduard-Maurer-Str. 9
DE-16761 Hennigsdorf

Tel: +49 (0)3302 8982 4 10
Mail: vertrieb@me-systeme.de
Web: www.me-systeme.de

Stand: 07.11.2026