3-Axis Force Sensor K3D40 2N

Item number: 3108



Highlights

- 3D force sensor for the smallest forces
- Compact dimensions: 40 x 40 x 20 mm³
- Compensation matrix "s" for minimized crosstalk

The K3D40 3-axis force sensor is suitable for force measurement in three mutually perpendicular axes. It features a particularly compact design with a footprint of 40 mm x 40 mm and a low overall height of only 20 mm.
The K3D40 3-axis force sensor is available for forces of 2 N, 10 N, 20 N, and 50 N. It is particularly suitable for measuring the smallest forces. The K3D40 2N variant can resolve forces from 40 µN to 400 µN, depending on the measuring amplifier.

The K3D40 3-axis force sensor is equipped with full-bridge strain gauges. The signals from the full-bridge strain gauges each correspond to a force component in the x-, y-, and z-directions. The vector decomposition is therefore achieved mechanically, by three orthogonally arranged spring-joint guides (double cantilever beams), and additionally by the arrangement of the strain gauges in the Wheatstone bridge, so that residual transverse forces and moments are also compensated electrically/circuit-wise. The three double cantilever beams are connected in series in this 3D force sensor.

Calibration of 3-Axis Force Sensors – From Standard (cv) to High Precision (s)

A key characteristic of 3D force sensors is crosstalk: applying a force also triggers a measurement in the two unloaded axes. Thanks to several compensation mechanisms (mechanical and electrical), crosstalk is typically less than 3% of the nominal load. Crosstalk is reproducible and proportional to the amplitude of the applied force. By applying an additional compensation matrix, crosstalk in all axes can be reduced to a maximum of less than 1%.

By default, you receive two factory calibrations, each with two measurement points:

one **without a compensation matrix (“cv”)** and one **with extended matrix compensation (“s”)**.

ME-Meßsysteme GmbH
Eduard-Maurer-Str. 9
DE-16761 Hennigsdorf

Tel: +49 (0)3302 8982 4 10
Mail: vertrieb@me-systeme.de
Web: www.me-systeme.de

Stand: 19.11.2026

For detailed proof of the sensor's linearity, you can optionally **extend the calibration to 4 or 6 measurement points:**

- Factory calibration certificate SL/4 (4 measurement points)
- Factory calibration certificate SL/6 (6 measurement points)

This ensures your sensor is optimally calibrated to your application from the very first measurement.

Optional special version

- Temperature range -40°C to 180°C
- Vacuum version from 10^{-5} mbar
- Pressure range up to 8 bar

ME-Meßsysteme GmbH
Eduard-Maurer-Str. 9
DE-16761 Hennigsdorf

Tel: +49 (0)3302 8982 4 10
Mail: vertrieb@me-systeme.de
Web: www.me-systeme.de

Stand: 19.11.2026

Technical Drawing

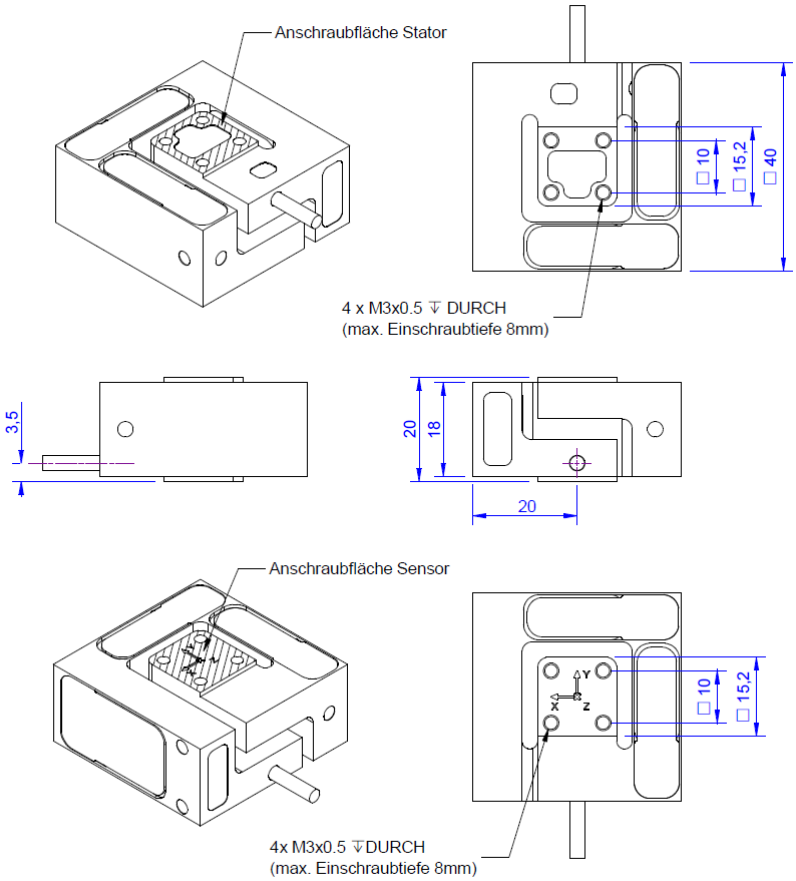

ME-Meßsysteme GmbH
Eduard-Maurer-Str. 9
DE-16761 Hennigsdorf

Tel: +49 (0)3302 8982 4 10
Mail: vertrieb@me-systeme.de
Web: www.me-systeme.de

Stand: 19.11.2026

Technical Data

Basic Data		Unit
Type	3-axis force sensor	
Force direction	Tension/Compression	
Rated force Fx	2	N
Rated force Fy	2	N
Rated force Fz	2	N
Force introduction	Internal thread	
Dimension 1	M3x0,5	
Sensor Fastening	Internal thread	
Dimension 2	M3x0,5	
Operating force	200	%FS
Rated displacement	0.15	mm
Material	alluminum-alloy	
Natural frequency fx	500	Hz
Dimensions	40 x 40 x 20	mm³
Height	20	mm
Length or Diameter	40	mm
Torque limit	5	Nm
Bending moment limit	5	Nm
Breaking force	600	%
Variants	2N... 50N	

ME-Meßsysteme GmbH
Eduard-Maurer-Str. 9
DE-16761 Hennigsdorf

Tel: +49 (0)3302 8982 4 10
Mail: vertrieb@me-systeme.de
Web: www.me-systeme.de

Stand: 19.11.2026

Electrical Data		Unit
Rated output x-axis	0.5	mV/V
Rated output y-axis	0.5	mV/V
Rated output z-axis	0.5	mV/V
Zero signal tolerance	0.1	mV/V
Rated range of excitation voltage from	2.5	V
Rated range of excitation voltage to	5	V
Operating range of excitation voltage from	1	V
Operating range of excitation voltage to	10	V
Input resistance x-axis	350	Ohm
Output resistance x-axis	350	Ohm
Input resistance y-axis	350	Ohm
Output resistance y-axis	350	Ohm
Input resistance z-axis	350	Ohm
Output resistance z-axis	350	Ohm
Insulation resistance	5	GOhm
Tolerance input resistance	5	Ohm
Tolerance output resistance	5	Ohm

Eccentricity and Crosstalk		Unit
Influence of eccentric load to FS	1	%FS / 2Nm
Crosstalk from x to y at rated load	1	%FS
Crosstalk from y to x at rated load	1	%FS
Crosstalk from z to x/y at rated load	1	%FS
Crosstalk from x/y to z at rated load	1	%FS

ME-Meßsysteme GmbH
Eduard-Maurer-Str. 9
DE-16761 Hennigsdorf

Tel: +49 (0)3302 8982 4 10
Mail: vertrieb@me-systeme.de
Web: www.me-systeme.de

Stand: 19.11.2026

Accuracy Data		Unit
Accuracy class	0,5	
Relative linearity error	0.2	%FS
Relative zero signal hysteresis	0.1	%FS
Temperature effect on zero signal	0.05	%FS/K
Temperature effect on characteristic value	0.05	%RD/K
Relative creep	0.05	%FS

Environmental Data		Unit
Rated temperature range from	-20	°C
Rated temperature range to	60	°C
Operating temperature range from	-20	°C
Operating temperature range to	70	°C
Storage temperature range from	-20	°C
Storage temperature range to	70	°C
Environmental protection	IP65	

[1)] The exact nominal sensitivity is indicated in the test report.Crosstalk is less than 1% when using the compensation matrix (type s). Without using the compensation matrix, crosstalk is less than 3% (matrix type cv).

Pin Assignment

Channel	Symbol	Description	Wire color	PIN
1	+Us	positive bridge supply	brown	
	-Us	negative bridge supply	white	
	+Ud	positive bridge output	green	
	-Ud	negative bridge output	yellow	
2	+Us	positive bridge supply	pink	
	-Us	negative bridge supply	grey	
	+Ud	positive bridge output	blue	
	-Ud	negative bridge output	red	
3	+Us	positive bridge supply	purple	
	-Us	negative bridge supply	black	
	+Ud	positive bridge output	orange	
	-Ud	negative bridge output	transparent	

ME-Meßsysteme GmbH
Eduard-Maurer-Str. 9
DE-16761 Hennigsdorf

Tel: +49 (0)3302 8982 4 10
Mail: vertrieb@me-systeme.de
Web: www.me-systeme.de

Stand: 19.11.2026